RD007 - Applicant Guide to Assessment and approval of new Robust Details

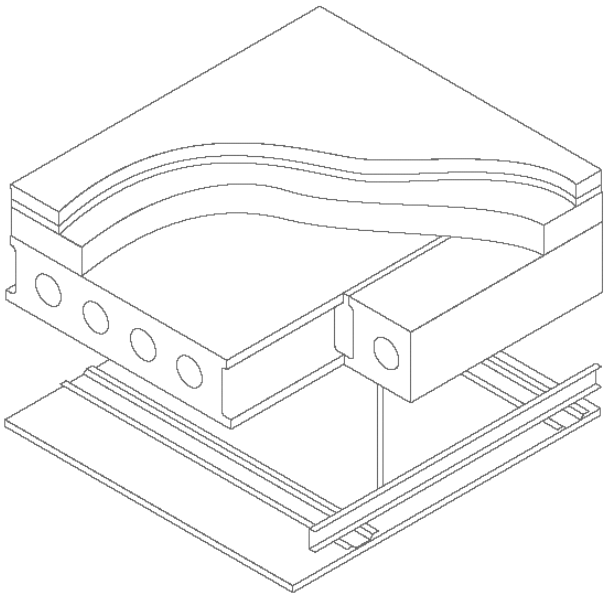

1 Introduction 3

2 Process checklist 4

3 Pre-submission planning 5

3.1 Generic or Proprietary Full Candidate Robust Detail (CRD) 5
3.2 Amend an Existing RD rather than apply for a Full CRD 5
3.3 Testing Considerations 5
3.4 Assessment Criteria 6
3.5 Unusual or Innovative Designs 6

4 Stage A 7

4.1 Stage A process 7
4.2 Application and Stage A submission 7
4.3 Stage A assessment 8

5 Stage B 9

5.1 Stage B process 9
5.2 Stage B testing 9
5.3 Stage B test results 10
5.4 Stage B assessment 10

6 Stage C 11

6.1 Issue and publication of new/amended RDs 11

7 Frequently Asked Questions 12

7.1 Testing 12
7.2 Assessment process 12
7.3 Financial 13
7.4 The Part E Robust Details Scheme 14

1 Introduction

This is the process you need to follow if you want to establish a new Robust Detail or amend an existing one. It involves design assessments, site inspections and acoustic testing. We can only approve and issue your proposed new Robust Detail or amendment where it meets the Robust Details scheme requirements. The process has three simple stages:

Stage A You make an application which includes design details and the first batch of acoustic test results. We assess the acoustic performance and robustness of your design. If the assessment is successful your 'candidate' Robust Detail (CRD) can progress to Stage B.

Stage B You submit the remainder of the required test results. We assess the acoustic performance and robustness of your design taking account of all the test results. If the assessment is successful we then approve your design, and your application can progress to Stage C. We will also assign an entitlement to Code for Sustainable Homes credits if appropriate.

Stage C We publish the new Robust Detail or amendment and make it available for use by builders and developers to demonstrate compliance with Requirement E1 of The Building Regulations (England and Wales) and/or Mandatory Standard 5.1 of Building (Scotland) Regulations; and where applicable to gain credits for the Code for Sustainable Homes.

Before doing any testing or preparing your application, we recommend that you contact us and, if necessary, arrange a meeting so that we can discuss your proposals and answer any questions you may have. By fully understanding the process and us understanding your design, we will be able to provide appropriate advice; and you will be better placed to identify a cost-effective test plan.

You can contact us on 0870 240 8209 or technical@robustdetails.com.

2 Process checklist

Please use this checklist to help you to complete the process and avoid delays.

Pre-submission planning (Section 3)	Tick
Read through the applicant guide	☐
Contact RDL to discuss application	☐
Establish your testing strategy and programme	☐
Stage A (Section 4)	Tick
Arrange for & carry out Stage A testing in accordance with doc. TR01	☐
Test results comply with performance requirements	☐
Complete and sign the Test Results Form (Form A2)	☐
Complete the application form, including payment	☐
Stage B (Section 5)	Tick
Receive notification from RDL that Stage A assessment successful	☐
Pay fee to RDL for Stage B	☐
Arrange for Stage B testing in accordance with document TR01	☐
Notify RDL in advance, of test sites, dates and test bodies to be used	☐
Testing completed and in accordance with document TR01	☐
Test results comply with performance requirements	☐
Complete and sign Test Results Form (Form A2) for each site	☐
Submit test results including documents listed in Section 5.3	☐
Stage C (Section 6)	Tick
Receive notification from RDL that Stage B approval has been granted	☐
Pay fee to RDL for Stage C	☐
Provide RDL with any further information for publication	☐

3 Pre-submission planning

You can apply for a Candidate Robust Detail (CRD) in a number of ways:

3.1 Generic or Proprietary Full Candidate Robust Detail (CRD)

Generic RDs are capable of being adequately specified without reference to any branded products or systems. Typically, generic applications tend to be submitted mainly by trade associations and builders.

Proprietary RDs are those that, in our view, are not capable of being adequately specified without reference to one or more named or branded system or unique product of a specific manufacturer.

3.2 Amend an Existing RD rather than apply for a Full CRD

It is possible to make an application to amend an existing robust detail. For example, you can submit an application for a new flanking condition for use with an existing RD specification. Applications to amend an existing RD follow the same process as applications for new RDs although less testing is usually required (see document TR01 “Test and Performance Requirements”). However, we will only process applications to amend an existing proprietary RD type-specification if you are the original proposer or you gain the approval of the original proposer.

3.3 Testing Considerations

We recommend that you contact us at the design stage to discuss your application and the options that might be open to you before you do any testing. For example, in some cases, it **may** be possible to use an alternative flanking condition to test structures which could then enable us to increase the scope of the final published specification.

Once you have considered your options, decide upon your testing strategy. All testing needs to be planned and organised by you, and it is crucial that you read our Test and Performance Requirements first (please see document TR01) in order to formulate a cost-effective testing programme.

3.4 Assessment Criteria

Our assessment decisions will be based on two factors: acoustic performance and **'robustness'**.

- The acoustic performance will be assessed on the basis of the test data.
- In order to be considered as robust, the design must, in the judgement of our independent technical experts, be practical to build on site and reasonably tolerant to workmanship variations. They will also take into account other issues such as number of components and ease of inspection.

We strongly advise you to consider the robustness aspect at the outset. And if necessary, contact RDL for further advice and guidance.

3.5 Unusual or Innovative Designs

If your application incorporates any new, unusual or innovative materials, designs or methods of construction, we may ask you for an independent assessment by an authoritative product approval organisation.

4 Stage A

4.1 Stage A process

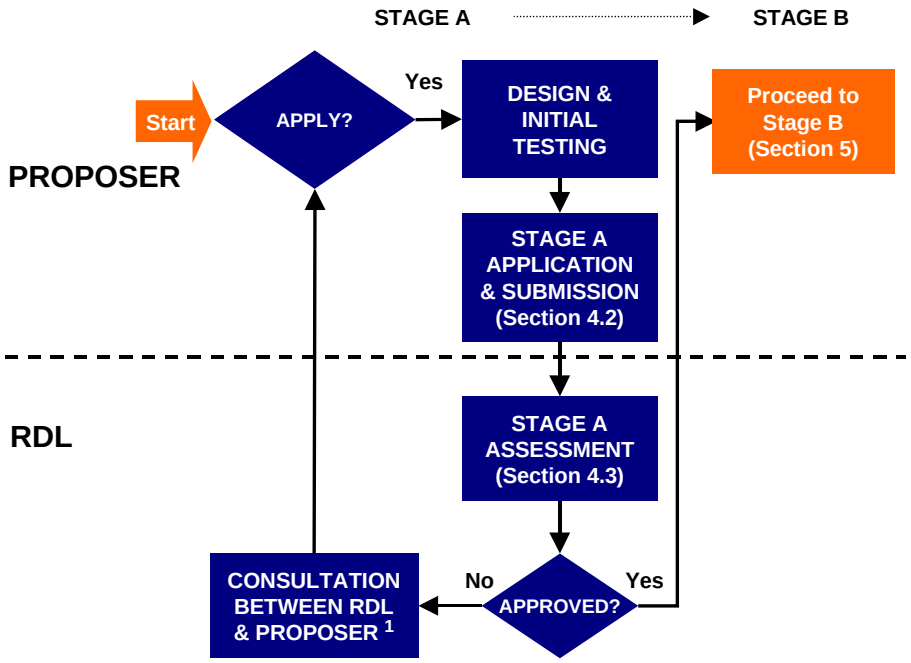

[1] Appropriate action may be agreed resulting in a revised submission

4.2 Application and Stage A submission

We need the following documents in your stage A submission please:

- Application form (if not already submitted).
- Application/'Stage A' fee (see www.robustdetails.com for current fees).
- 2 copies of each relevant sound test report and a completed copy of the Test Results Form (Form A2)
- 2 copies of the section details specifying the exact 'as-built' construction elements of the separating wall or floor structure(s) tested including all appropriate dimensions and product names/types tested*.
- 2 copies of the drawings showing flanking wall (external wall)/floor details in contact with separating wall/floor and relevant wall/ceiling lining finishes as tested*.
- 2 copies of the floor plans of the plots tested, including dimensions.

**Please refer to an existing published RD specification to identify the type and level of detail required.*

4.3 Stage A assessment

Upon receipt of the full submission and Stage A payment, we will review the sound test results and check them against our Test and Performance Requirements (document TR01).

If the test results meet or exceed our requirements, the robustness of the design will be assessed at the Standards Committee meeting (please also refer to 7.2.4).

We will inform you of the outcome of the assessment, and if successful, you may then proceed to make a Stage B submission (see Section 5).

5 Stage B

5.1 Stage B process

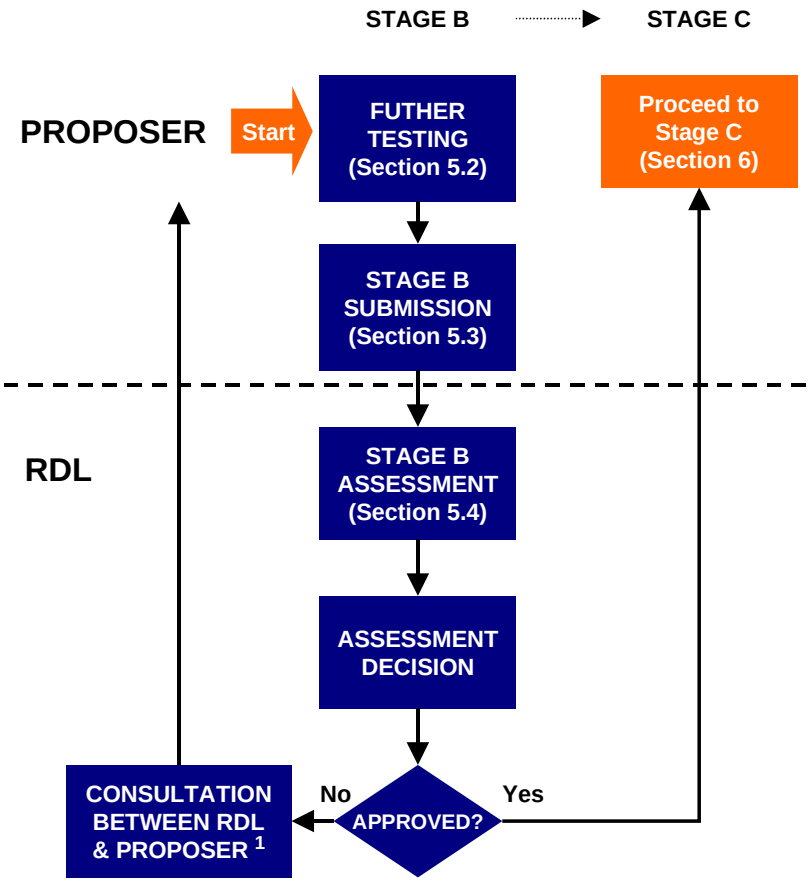

[1] Appropriate action may be agreed resulting in a revised submission

5.2 Stage B testing

You will need to:

- Arrange and finance further testing and ensure this is carried out in accordance with our Test & Performance Requirements (document TR01).
- Inform us of each test site, test date and the test body in advance of each test, so that we can, if we wish, carry out an inspection and/or observe testing. It also allows us to confirm that the selected structures are suitable to test, and gives us the opportunity to arrange to see the installation and clarify any queries raised at committee. Please give advance notice by e-mail (technical@robustdetails.com) or by sending us a completed copy of the Stage B Test Site Notification Form (Form B1) which is included in this pack.
- Select your test structures then “Test and declare” i.e. no pre-testing of the structures or “cherry-picking” of test results is allowed. Also, no 'rectification

and retesting' is allowed. Form A2 requires you and the testing organisation to give signed confirmation that the selection and testing was carried out in accordance with our requirements.

5.3 Stage B test results

As and when your test results become available, please provide us with the following documentation:

- 2 copies of each relevant sound test report and a completed copy of the Test Results Form (Form A2).
- 2 copies of the section details specifying the exact ‘as-built’ construction elements of the separating wall or floor structure(s) tested including all appropriate dimensions and product names/types tested*.
- 2 copies of the drawings showing flanking wall (external wall)/floor details in contact with separating wall/floor and relevant wall/ceiling lining finishes as tested*.
- 2 copies of the floor plans of the plots tested, including dimensions.

**Please refer to an existing published RD specification to identify the type and level of detail required.*

5.4 Stage B assessment

Upon receipt of the full submission and Stage B payment, we will review all of the sound test results and check them against our Test and Performance Requirements (document TR01).

If the test results meet or exceed our requirements, the Standards Committee will reassess the robustness of the design in light of the additional test results, then make a final decision on the success of the application and its eligibility for credits under the Code for Sustainable Homes.

We will inform you of the outcome of the assessment, and if successful, your application will proceed to Stage C (see Section 6).

6 Stage C

6.1 Issue and publication of new/amended RDs

We will arrange for artwork to be prepared and consult you on the contents before publication.

Once published, we will make the new, or revised, RD specifications available to all existing subscribers and new purchasers. We will also make the necessary arrangements so that builders, developers and their agents can register their dwellings and use the new/amended RD as a means of complying with Requirement E1 of the Building Regulations (England and Wales) and/or Mandatory Standard 5.1 of Building (Scotland) Regulations.

We will invoice you for the Stage C fee once you have approved the artwork unless it has already been paid.

Where applicable, the detail will be added to the Code for Sustainable Homes table on the RDL web site.

RDL will also present proprietary details for assessment and inclusion in The Green Guide.

7 Frequently Asked Questions

7.1 Testing

7.1.1 The Test and Performance Requirements require the use of testing organisations which are independent from the Proposer for most of the tests. What do you mean by 'independent from the Proposer'?

A testing organisation would **not** be considered independent if it, or any of it's nominees:

- had a professional or financial interest in the outcome of the assessment.
- was responsible for the design or construction of any of the work being tested in any capacity.
- was a member, officer or employee of a company or other body, which had a professional or financial interest in the work.
- was a partner or was in the employment of a person who had a professional or financial interest in the work.

7.2 Assessment process

7.2.1 Why do you need the option to carry out inspections on Stage B test structures or observe Stage B testing?

We may decide to carry out inspections of test structures or observe tests to ensure that the structure being tested was built exactly in accordance with the design that you submitted, and that no additional treatments or materials were applied that could enhance acoustic performance. It also gives us the opportunity to see the installation and clarify any queries raised at committee.

7.2.2 Who makes the final approval decision?

We have appointed independent technical experts to our Standards Committee and they make the final decision on the approval or otherwise of your application. In the event that they do not have the appropriate technical expertise to assess any aspect of your application, the Standards Committee has the power to engage the help of other independent experts as necessary.

7.2.3 Who decides whether a design is robust?

We have appointed independent technical experts to our Standards Committee and they make a judgement about robustness and take it into account when making the final approval decision. In the event that they do not have the appropriate technical expertise to judge the robustness of the design, the Standards Committee has the power to engage the help of other independent experts as necessary.

7.2.4 When will you assess our submission?

The Standards Committee meets on a quarterly basis and we publish its meeting dates and associated submission deadline dates on our web site (www.robustdetails.com). You will need to meet the relevant submission deadline if you want the Committee to assess your Stage A or Stage B submission at the associated meeting.

7.3 Financial

7.3.1 How much will it cost me for RDL's assessment and approval?

We publish a set of fees on our web site (www.robustdetails.com) and the appropriate fee is payable to RDL with your Stage A and Stage B submissions, and upon request for Stage C.

7.4 The Part E Robust Details Scheme

7.4.1 How can you be sure that built RDs will comply with Requirement E1 of the Building Regulations (England and Wales)?

Our assessment process aims to build in a safety margin so that, even if minor mistakes occur in the construction of an RD on site, acoustic performance should still exceed the performance requirements stated in Approved Document E.

We monitor the performance of each RD type in service by carrying out visual inspections and acoustic tests on a sample of built RDs in the market place. So far, we have exceeded the compliance rates agreed with government and set down as targets in our quality policy.

Please be aware that, if any RD type consistently fails to meet our performance target, we are obliged to take action. This may include suspension or even withdrawal of the RD type.

TR01

Test and performance requirements

Contents

1	Description	3
2	Performance criteria used by RDL to assess applications	3
3	Arranging testing	3
4	Test bodies	4
5	Test reports	4
6	Test sampling requirements	4
7	Steps & Staggers between dwellings	5
8	Test Rooms	6
9	Tests on separating walls	6
10	Tests on separating floors	6

1 Description

This document contains the test and performance requirements for the assessment of a candidate Robust Detail (CRD), or amendments to an existing RD (flanking constructions or component). The test requirements differ slightly between these assessments, but the performance requirements remain the same throughout.

2 Performance criteria used by RDL to assess applications

Airborne sound insulation of separating walls and floors:

For England and Wales	For Scotland
Individual values must be **≥ 47dB $D_{nT,w}$ +C_{tr}**	Individual values must be **≥ 58dB $D_{nT,w}$**
*Mean value must be **≥ 50dB $D_{nT,w}$ +C_{tr}**	*Mean value must be **≥ 61dB $D_{nT,w}$**

Impact sound transmission of separating floors:

For England and Wales	For Scotland
Individual values must **≤ 60 dB $L'_{nT,w}$**	Individual values must be **≤ 54dB $L'_{nT,w}$**
*Mean value must be **≤ 57 dB $L'_{nT,w}$**	*Mean value must be **≤ 51dB $L'_{nT,w}$**

**Note: The mean value is calculated at both Stage A (mean of 8 individual values) and Stage B (mean of 30 individual values including Stage A test results), and is calculated from the arithmetic mean, where the rounding is based on a single decimal place.*

3 Arranging testing

In all cases, you (the Proposer) are responsible for arranging and financing the testing, and for ensuring that the test body is briefed to test in accordance with the requirements. Sound testing may be undertaken on developments outside of the country (or countries) where the final detail will be offered for registration, provided the tested construction can be replicated on future registered plots while still being in accordance with all the relevant and applicable Standards and Building Regulations.

4 Test bodies

Sound insulation tests must be carried out in the same way as set down in: Approved Document E of the Building Regulations for pre-completion sound testing; or Section 5 (Domestic) of the Building (Scotland) Regulations. Test Bodies must be either UKAS accredited (or European equivalent) or ANC registered for testing in accordance with the relevant ISO 140 standards.

www.ukas.org
www.theanc.co.uk

5 Test reports

Results of testing must be rated and reported in accordance with ISO 717 and should contain the following:

- measurement data for third octave band frequencies 100Hz to 3150Hz
- sound pressure levels in source and receiving rooms
- reverberation times of receiving rooms (measured using T_{20})
- D_{nT} and L'_{nT} values
- single weighted values of $D_{nT,w}$ and $L'_{nT,W}$
- spectrum adaptation terms C and C_{tr} (ISO 717-1)
- spectrum adaptation terms C_1 (ISO 717-2)
- test reports must clearly describe, in addition to any other requirements in the relevant test standards:
  - the construction under test
  - the material components of the main separating element
  - flanking walls and linings.
- Plans and sectional drawings of the dwellings on all sides of the tested wall or floor must be provided and these must include:
  - room dimensions
  - dimensions of any steps and/or staggers.

6 Test sampling requirements

The tables below indicate minimum sampling requirements.

New Robust Detail					
Stage	**Min no. tests**	**Min no. Sites**	**Max no. tests at any one site**	**Min no. test bodies**	**Max no. tests by each test body**
A	8	1	8	1	8
B	22	3	8	2	15
Total	***30***	***4***	***8***	***3***	***15***

New Flanking Element to Existing Robust Detail					
Stage	**Min no. tests**	**Min no. Sites**	**Max no. tests at any one site**	**Min no. test bodies**	**Max no. tests by each test body**
A	8	1	8	1	8
B	7	1	7	1	7
Total	***15***	***2***	***8***	***2***	***8***

- Test constructions must be part of new homes* on actual building sites (i.e. no lab testing).
- The combined tests of Stage A & B should not be carried out on sites of, or constructed under the control of the same builder/developer organisation, i.e. two separate legal entities must be involved.

** Note it may be possible to submit PCT results undertaken for new build halls of residence or retirement/care homes, provided the layouts are similar to a house or apartment. Please contact RDL to discuss before proceeding with this.*

7 Steps & Staggers between dwellings

Steps and staggers should be avoided where possible, or where unavoidable should be restricted to a maximum of 300mm.

8 Test Rooms

Test rooms should be restricted to living rooms, kitchens, dining rooms and bedrooms. In the case of wall tests, no fitted kitchen or wardrobe units should be on or in front of the separating wall being tested. Preferably, rooms should have a min. volume of $25m^3$. RDL may reject tests conducted in rooms less than $20m^3$ if modal resonances appear to have affected the test result.

9 Tests on separating walls

Up to two individual tests may be carried out on any one separating wall, providing there are two pairs of valid rooms either side of the wall (e.g. in a pair of houses with living room **pairs** on the ground floor and bedroom pairs on the first floor), two tests can be carried out, one at ground floor and one at first floor.

10 Tests on separating floors

Individual tests on separating floors are always considered to comprise both an airborne sound insulation test and an impact sound transmission test (e.g. for Stage A, 8 airborne and 8 impact tests should be carried out to make up 8 test structures.) As the airborne and impact tests are submitted as a set, they should be carried out on the same separating floor. Up to two individual tests may be carried out on any one separating floor, providing there are two **pairs** of valid rooms either side of the floor (e.g. in a pair of flats with living rooms stacked one directly above another and bedrooms stacked one directly above another) then two tests can be carried out, living room pairs and bedroom pairs.

TC01 - Terms and conditions for Robust Detail type-approvals

1. INTRODUCTION AND SCOPE

1.1 The purpose of this Agreement is to enable RDL to Assess and, subject to successful Assessment, approve and issue new Type-specifications including amendments to existing Type-specifications. Amendments may include, for example, new flanking conditions, specification enhancements and/or alternative components.

1.2 As used herein the term "Agreement" shall mean, collectively, the Terms and Conditions and/or (if any) exhibits and schedules attached hereto as any of the same shall be amended from time to time in accordance herewith.

1.3 If we approve a Type-specification, we will publish and make it available for use in new-build attached dwellings in England and Wales as a means of demonstrating compliance with Requirement E1 in Schedule 1 to the Building Regulations (E&W) and/or in Scotland as a means of demonstrating compliance with Mandatory Standard 5.1 of the Building (Scotland) Regulations.

1.4 For England and Wales, the following is excluded from the scope of the Robust Details Part E Scheme: building work (as defined in Regulation 3(1) of the Building Regulations) which is classified for building control purposes as being material change of use (as defined in Regulation 5 of the Building Regulations) and/or Residential (as defined in Table D1 of Approved Document B).

1.5 For Scotland, the following is excluded from the scope of the Robust Details Section 5 Scheme: building work (as specified in schedule 2 to regulation 4) to convert, which makes such change in the occupation or use of the building; and/or that not within the definition of “Domestic building” as specified in Appendix A to the Domestic Technical Handbook for Building (Scotland) Regulations

1.6 This Agreement shall be effective as of the date of your submission to us of your first Application hereunder.

1.7 By submitting an Application, you agree to comply with the Terms and Conditions.

2. DEFINITIONS AND INTERPRETATION

2.1 Except where the context otherwise requires, the following interpretations apply in this Agreement:

- ‘**Agreement**’ is as defined in Clause 1.2.
- **'Application'** means an application in accordance with this Agreement by the Proposer for RDL to Assess or amend a Type-specification.
- ‘**Assessment’** means any part of the process in which we conduct an assessment, evaluation and/or review of an Application including Test data, information and/or drawings, and "Assess" shall be construed accordingly.
- '**Building Regulations**' means the Building Regulations 2000 (SI 2000 No 2531) in England & Wales and/or Building (Scotland) Regulations 2004 (Building (Scotland) Act, 2003).
- "**Business Day**" means any day other than: a Saturday or a Sunday or a public holiday in England.

- ‘**Document**’ and ‘**documentation**’ refer to any form of information including when in paper or electronic form.
- '**Force Majeure**' is as defined in Clause 16.6.
- '**Information**' is as defined in Clause 10.1.1
- '**Intellectual Property**' means all intellectual property rights of whatever nature throughout the world (including patents, patentable rights, copyright, moral rights, performers' rights, get-up, design rights, utility models, rights in domain names, trade marks (whether or not any of the above are registered), trade names, rights in inventions, rights in data, database rights, rights in know-how and confidential information and all other intellectual and industrial property and similar or analogous rights existing under the laws of any country and all pending applications for and right to apply for or register the same (present, future and contingent and including all renewals, extensions, revivals and all accrued rights of action)).
- '**Proposer**’, ‘**you**' and '**your**' mean the company, organisation or person who is responsible for an Application.
- ‘**Proprietary**’ refers to a design that cannot be specified without reference to one or more named and branded systems or products.
- **'Robust Detail**' is as defined in the Schedule hereto.
- '**Terms and Conditions**' means these written terms and conditions.
- ‘**Test**’ means acoustic test of a separating wall or floor structure built on an actual building site which is subject to the normal building control process and built in accordance with the design submitted in your Application.
- ‘**Type-specification**’ means a specification detailing the design of a specific Robust Detail type (e.g. EWM1 or VWM11 are the names of specifications for types of Robust Detail masonry cavity separating wall).
- '**We**', '**us**' and '**RDL**' mean Robust Details Limited.

2.2 In this Agreement (except where the context otherwise requires):-

2.2.1 the headings of Clauses and the Schedule are included for convenience only and shall not affect the interpretation of the Agreement;

2.2.2 the Schedule is an integral part of the Agreement, and any reference to the Agreement includes the Schedule;

2.2.3 a "**party**" means either party to the Agreement and includes (and the Agreement shall be binding on and inure to the benefit of) its permitted assignees (if any) and/or the successors in title to substantially the whole of its undertaking, and "**parties**" shall be construed accordingly;

2.2.4 words denoting the singular shall include the plural and vice versa; references to a gender shall include all other genders; and references to the word "**include**" or "**including**" are to be construed without limitation;

2.2.5 any reference to a statute, statutory provision or subordinate legislation ("**Legislation**") shall (except where the context otherwise requires) be construed as referring to such Legislation as amended and in force from time to time and to any Legislation which enacts or consolidates (with or without modification) any such Legislation;

2.2.6 “**loss**” includes destruction; "**month**” means calendar month unless otherwise defined; and “**personal injury**” includes sickness and death.

3. ELIGIBILITY

3.1 Any Proposer who is able and willing to fulfil this Agreement is entitled to submit an Application. However, in the case of an Application to amend an existing Proprietary Type-specification, we only agree to Assess it if (a) you are the original proposer or (b) you are the assignee or successor-in-title of the original proposer or (c) you obtain and serve on us the written approval of the original proposer in advance.

4. APPLICATIONS

4.1 In making an Application, you agree to the Terms and Conditions and to meet our Test and performance requirements as published by us from time to time. If you do not so agree or if you fail to comply with any of your obligations under the Agreement at any time, we may (without prejudice to any of our other rights and remedies) cease our Assessment of the Application and, if applicable, decide whether or not to refund all, part or none of any fees paid by you to us in respect of the said Application.

4.2 You must promptly notify us of any subsequent change to the Application details (e.g. changes to the design specification, change of contact details).

5. ASSESSMENTS

5.1 You agree to notify to RDL details of the location of Test structures in advance and facilitate access for us (or third parties engaged by us) to inspect them or observe Testing if we wish (as stated in our Test and performance requirements as published by us from time to time).

5.2 We may engage third parties to perform some Assessment activities under our direction and supervision but we will always make the final Assessment decision.

6. APPROVAL AND WITHDRAWAL OF TYPE-SPECIFICATIONS

6.1 Following a successful Assessment and approval of an Application, we will publish the new or revised Type-specification and make it available for use as a means of satisfying Requirement E1 of Schedule 1 and/or Standard 5.1 to the Building Regulations. While any particular Type-specification remains in service, we will monitor its performance by inspecting and testing samples of the corresponding ‘as built’ Robust Detail type in the market. If any particular Robust Detail type consistently fails to meet our performance targets (as stated in our quality policy as published by us from time to time), we will take appropriate action at our discretion, which may include suspension or even withdrawal from service of that Robust Detail type.

7. CHANGES TO PROPRIETARY PRODUCTS

7.1 You agree to seek our written approval for any proposed change to any Proprietary products incorporated in your Application that could affect acoustic performance and/or function. You agree to do this prior to the change taking effect and regardless of whether the change occurs during the course of our processing of your Application or afterwards when the Type-specification is published and in service. Depending on the nature of any such change, we may request acoustic Test data or other evidence to assist in our assessment of whether we can maintain the Type-specification, in which case you will promptly provide the same to us at your own cost and expense. We may amend, suspend or withdraw the Type-specification if you fail to obtain our approval for any such change.

8. INTELLECTUAL PROPERTY RIGHTS

8.1 As between you and us we own all property rights (including Intellectual Property rights) throughout the world in all information, documents, reports, plans, drawings, works and materials which may be discovered or produced during or incidental to the performance of any service provided hereunder by RDL, alone or jointly.

8.2 As between you and us you own all property rights (including Intellectual Property rights) throughout the world in all information, documents, reports, plans, drawings, works and materials provided by you in connection with your Application. However, you agree to make any of the aforesaid available for our use on a royalty-free basis where requested by us for the performance of our service and for the full duration of this Agreement.

9. CONFIDENTIAL INFORMATION

9.1 Save as may be required by operation of law or the rules of any Stock Exchange or by any authority of competent jurisdiction, the Proposer:-

9.1.1 shall keep strictly confidential all confidential information received, obtained or learned from RDL before or during the term of this Agreement pursuant to or in preparation or contemplation of its performance of its obligations hereunder relating to RDL or any of its officers, directors, servants, agents, customers, or suppliers or to the business of any of the foregoing persons, and whether or not expressly designated confidential and/or in tangible format ("**Information**");

9.1.2 shall not without the prior written consent of RDL use or permit or cause any Information to be used save for the direct purposes of the Agreement; and

9.1.3 shall not without the prior written consent of RDL disclose or permit or cause any Information to be disclosed to any person other than to those of its officers, directors, servants, agents or professional advisers (a) who need to be informed thereof to enable the Proposer to perform its obligations hereunder or to take advice thereon and (b) who have been informed of the Information's confidentiality and directed to keep it confidential and (c) who are under an enforceable obligation of confidentiality to the Proposer.

9.2 The Proposer shall forthwith notify to RDL any actual, suspected or threatened use or disclosure of RDL's Information in contravention of this Clause 10 of which it becomes aware and shall render such assistance to restrain such use as RDL may request.

9.3 The Proposer acknowledges and agrees that, in the event of a breach or threatened breach of this Clause 10, RDL may have no adequate remedy in money or damages and accordingly may be entitled to preliminary, permanent and/or other injunctive relief.

9.4 Notwithstanding the foregoing the Proposer will have no obligation in connection with specific Information to the extent, but only to the extent, that:-

9.4.1 it is in the public domain at the time it is received, obtained or learned by it;

9.4.2 it subsequently becomes part of the public domain through no wrongful act by it; or

9.4.3 it is received by the Proposer from a third party who is lawfully authorised to disclose the same without breach of the Agreement and/or of any obligation to the Proposer.

10. PUBLICITY AND PROMOTION

10.1 You are not at any time, whether during or after the pendency of the Application or the term of this Agreement, permitted to use any of our Intellectual Property, including the Robust Details mark, name or any of our documents in any publicity or promotional material (or otherwise) without our prior written agreement.

10.2 You will not at any time, whether during or after the pendency of the Application or the term of this Agreement, make any misleading statement concerning us, our scheme, our Intellectual Property, any anticipated, potential or actual approval by us of your Application or products, or any RDL documents that we have permitted you to use.

11. FEES AND CHARGES

11.1 You undertake to pay the fees applicable at the time of the Application and as published on our web site.

11.2 Without prejudice to any other right or remedy that it may have, if the Proposer fails to pay any sum due to RDL hereunder on the due date, RDL may:

11.2.1 charge interest on such sum from the due date for payment at the annual rate of one per cent above the Bank of England base lending rate from time to time, accruing on a daily basis and being compounded quarterly until payment is made, whether before or after any judgment, and RDL may claim interest under the Late Payment of Commercial Debts (Interest) Act 1998; and/or

11.2.2 suspend all or any services hereunder until payment has been made in full.

11.3 All sums payable to RDL under the Agreement shall become due immediately on its termination, despite any other provision. This Clause 12.3 is without prejudice to any right to claim for interest under the law, or any such right under the Agreement.

12. EXPIRY

12.1 Once approved and published, a Type-specification will remain in place until such time that we deem that approval is no longer valid. For example, we may withdraw a Type-specification for reasons including the following:

- Consistent failure of the relevant Robust Detail type structures to achieve the required performance as measured by our own Testing of samples selected from the market.
- Continuation of Type-specification being precluded or rendered redundant by Force Majeure.
- Insufficient availability of the necessary materials and components.
- Proprietary Robust Detail made redundant due to the development of a replacement ‘generic’ Robust Detail, following the minimum period specified in Clause 5.2.
- Any other situation where, in RDL’s sole judgement, continuing approval would bring the RDL scheme and/or its approval activities into disrepute.

13. CANCELLATION OF THE APPLICATION

13.1 RDL reserves the right to reject or suspend your Application if you fail to comply with any of your obligations under this Agreement.

13.2 You may cancel your Application at any time by notifying us. If you cancel your Application, we will review any fees paid by you to us and the value of any work that we have carried out to date and decide at our sole discretion whether to refund all, part or none of the fees paid. Subject to our rights of set-off, which are expressly reserved, we will give a full refund of any instalment fee that you have paid provided that we have not started work on the relevant instalment.

13.3 If you cancel your Application, you agree to remove any published information within your control which is capable of being interpreted in such a way that could misrepresent the true position in relation to your Application.

14. COMPLAINTS AND APPEALS

14.1 We maintain a complaints, disputes and appeal procedure which is available to you for use in the event that you are not satisfied with any aspect of our service (details are published on our website at www.robustdetails.com).

14.2 If you receive a complaint in relation to any Type-specification that you originally proposed (including changes to existing Type-specifications), you agree to take prompt and appropriate action, record the details and inform us thereof. In the event that you decide to undertake a sound test as a result of the said complaint you agree to engage a measurement contractor who is:

14.2.1 accredited by the United Kingdom Accreditation Service (UKAS) with a scope of accreditation which includes pre-completion sound testing for Building Regulations Approved Document E, **or**

14.2.2 is registered, for the purpose of carrying out pre-completion sound testing for Building Regulations Approved Document E, with the Association of Noise Consultants, **or**

14.2.3 who is accredited by or registered with another professional body whose relevant criteria are at least as high as those of the aforesaid bodies.

15. LIMITATION OF LIABILITY

15.1 This Clause 16 sets out the entire financial liability of RDL (including any liability for the acts or omissions of its employees, agents and sub-contractors) to the Proposer in respect of the following:

15.1.1 any breach of the Agreement;

15.1.2 any use made by the Proposer of any service provided hereunder; and

15.1.3 any representation, statement or tortious act or omission (including negligence and breach of statutory duty) arising under or in connection with the Agreement.

15.2 Notwithstanding anything to the contrary herein, nothing in the Agreement limits or excludes the liability of RDL:-

15.2.1 for death or personal injury caused by RDL's negligence or that of its employees, agents or subcontractors as applicable; or

15.2.2 for any damage or liability incurred by the Proposer as a result of fraud or fraudulent misrepresentation by RDL.

15.3 RDL will endeavour to take reasonable steps to ensure that subject to Clause 16.2 all warranties, representations, guarantees, conditions and other terms, whether implied by legislation or common law are, to the fullest extent permitted by law, disclaimed and excluded by RDL from the Agreement, including (without prejudice to the generality of the foregoing) any implied warranty as to satisfactory quality or fitness for purpose.

15.4 Subject to Clause 16.2 the entire liability of RDL in respect of any claim against it by the Proposer arising under or in relation to this Agreement shall in no event exceed an amount equal to the aggregate of the fees paid by the Proposer to RDL pursuant to the Agreement in the 12 (twelve) months preceding the circumstance giving rise to the said claim, and RDL's liability shall be further limited to losses sustained as a direct result of the said circumstance.

15.5 Subject to Clause 16.2 RDL expressly excludes liability to the Proposer for any loss or damage (whether direct or indirect, and whether or not foreseeable) that is or can be characterised as a claim for (or arising from):

15.5.1 loss of revenue or profits;

15.5.2 loss of business opportunity or loss of contracts;

15.5.3 loss of goodwill or injury to reputation;

15.5.4 direct, indirect, consequential or special loss or damage; or

15.5.5 anticipated savings.

15.6 RDL shall have no liability to the Proposer hereunder to the extent that it is prevented from or delayed in performing any of its obligations hereunder by Force Majeure. For the purposes of the Agreement "**Force Majeure**" shall mean acts, events, omissions or accidents beyond the reasonable control of RDL, including strikes, lock-outs or other industrial disputes (whether involving the workforce of RDL or any other party), failure of a utility service or transport network, act of God, war, riot, civil commotion, terrorism, malicious damage, compliance with any legal requirement, accident, breakdown of plant or machinery, fire, flood, storm or default of suppliers or sub-contractors.

16. TERMINATION

16.1 RDL may terminate the Agreement by the service on the Proposer of no less than 1 (one) month's prior notice.

16.2 Without prejudice to any other rights or remedies which it may have, RDL may terminate the Agreement without liability to the Proposer immediately on giving notice to it if it commits a material breach of any of its obligations, warranties or representations expressed or implied herein or (if such a breach is remediable) fails to remedy that breach within 30 (thirty) days of it being notified in writing of the breach and being required to remedy it.

17. CONSEQUENCES OF TERMINATION

17.1 With effect from and including the date of termination of the Agreement:

17.1.1 RDL shall cease to perform any service thereunder; and

17.1.2 you will discontinue the use of any advertising matter that contains any reference to RDL.

17.2 All unpaid fees charged by RDL hereunder shall become due and payable immediately on termination.

17.3 There shall survive the termination of the Agreement Clauses 2, 9, 10, 11, 12, 15, 16, 18, 19, 20, 21 and 23 and any other provision of it whose terms or context requires its survival.

18. WARRANTY AND INDEMNITY

18.1 You warrant and undertake to us that:-

18.1.1 any Application that you submit to us hereunder shall be fully, properly and accurately completed, and that the information that it contains shall be valid and correct; and

18.1.2 you will at all times (both during and after the term of this Agreement) fully and effectively indemnify us from and against any and all losses, damages, liabilities, penalties, fees, costs and expenses (including legal and other fees and disbursements and any damages or compensation paid to compromise any settlement or claim) which we may sustain or incur arising directly or indirectly from any actual or alleged breach by you or on your behalf of any of your obligations, warranties or representations herein, express or implied and or any act of negligence or default on your part.

19. ASSIGNMENT AND SUB-CONTRACTING

19.1 RDL may assign, transfer, charge or sub-contract any of its rights or obligations under the Agreement to any person, firm or company except for any right or obligation to decide on the outcome of any Application for Assessment of a Type-specification.

19.2 The Proposer shall not be entitled to assign, transfer, charge or sub-contract any of its rights or obligations under the Agreement without the prior written consent of RDL.

20. NOTICES

20.1 All notices, orders, claims, demands or other forms of communication required or entitled to be given by either party under or in connection with the Agreement (together "**notices**") shall:-

20.1.1 given in writing in the English language;

20.1.2 be authenticated by signature or by such other method as agreed between the parties; and

20.1.3 be marked for the attention of the appropriate department or officer.

20.2 Notices shall be served by hand, prepaid post, facsimile, or electronic mail (where such a means of communication has been agreed between the parties in writing for the purposes of the Agreement).

20.3 Notices shall be deemed to have been received:

20.3.1 if delivered by hand, on the day of delivery if it is a Business Day and otherwise on the 1st (first) Business Day immediately following the day of delivery;

20.3.2 if sent by prepaid post, on the 5th (fifth) Business Day after the day of posting;

20.3.3 if sent by facsimile or other electronic means:

20.3.3.1 if transmitted between 0900 and 1700 hours on a Business Day, on completion of receipt by the sender of verification of the transmission from the receiving instrument; or

20.3.3.2 if transmitted at any other time, at 0900 on the 1st (first) Business Day following the completion of receipt by the sender of verification of the transmission from the receiving instrument.

20.4 The addresses (including electronic addresses) of each party to which all notices shall be sent are those specified in the Agreement, or such other address as either party may by notice specify to the other for the purpose of this Clause.

21. VARIATION

21.1 Notwithstanding anything herein to the contrary, RDL shall be entitled (subject only to the service of notice thereof on the Proposer) to qualify any permission herein to the Proposer to use any Robust Detail as a result of any defective performance of the latter.

21.2 Subject only to Clause 22.1, this Agreement may not be amended or modified in whole or in part at any time except by an agreement in writing executed in the same manner as this Agreement and signed by a duly authorised representative of each party.

22. GOVERNING LAW AND JURISDICTION

22.1 The Agreement shall be considered as a contract made in England, and any dispute or claim arising out of or in connection with it or its subject matter shall be governed by, and construed in accordance with, the law of England and Wales.

22.2 Subject only to Clause 15.1 the parties irrevocably agree that the courts of England and Wales shall have exclusive jurisdiction to settle any dispute or claim that arises out of or in connection with the agreement or its subject matter.

THE SCHEDULE

Robust Details

1 Generic Robust Details

1.1 A generic Robust Detail is a separating wall or floor structure that has completed its type approval Assessment successfully, and where the range of components used in the test structures were such that, in the judgment of RDL, the structure could be specified without reference to any "named or branded system or unique product" of a specific manufacturer.

1.2 Generic Robust Details may incorporate an option to substitute one or more of the generic components for a Proprietary component which has been assessed and approved by RDL for the purpose.

2 Proprietary Robust Details

2.1 RDL reserves the right to make a Proprietary Robust Detail ‘generic’. Circumstances in which this may happen include the following:

- A number of Applications are active at the same time which look, and perform under test, very similar to each other.
- The same or a different Proposer may apply to undertake further type approval Assessments on an existing Proprietary Robust Detail using different components in the test structure. If such further Assessment(s) would then enable the Proprietary Robust Detail to be specified generically, RDL reserves the right, after a minimum period of 12 (twelve) months from the publication of the Proprietary Robust Detail, to change it from a Proprietary to a generic Robust Detail.
- RDL undertakes (subject to Force Majeure) not to publish a generic Robust Detail, identical in all respects to a Proprietary Robust Detail save for the substitution of a general product specification for named Proprietary component(s), within 12 (twelve) months of first publication of the Proprietary Robust Detail in question unless otherwise agreed in writing by RDL and the original Proposer.

2.2 A Proprietary Robust Detail is a separating wall or floor structure that has completed its type approval Assessment successfully, and where the range of components used in the test structures were such that, in the judgment of RDL, the structure could not be specified without reference to one or more "named or branded systems or unique products" of a specific manufacturer.